REVISION HISTORY			
REV.	DESCRIPTION	DATE	REVISED BY:

MKL–100

KIT INCLUDES:

- 4 M8 T–NUTS
- 4 M8 FLAT–HEAD BOLTS
- 4 ANGLE BRACKETS

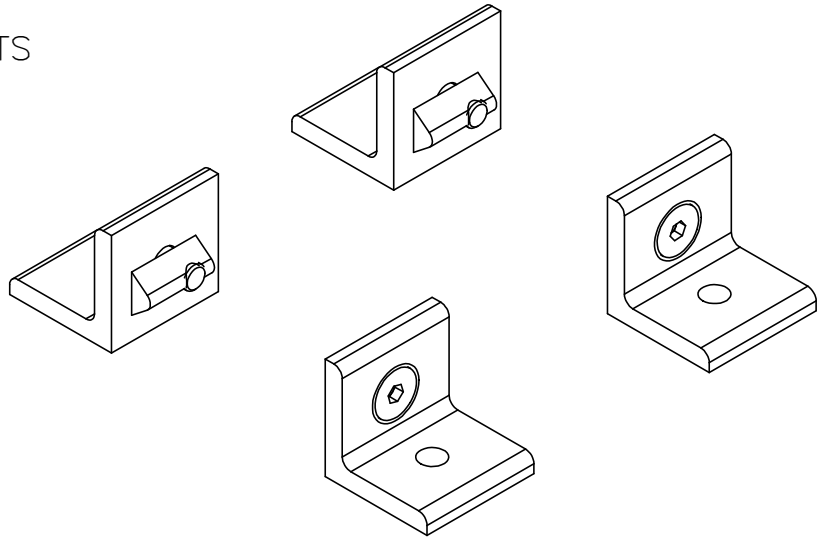

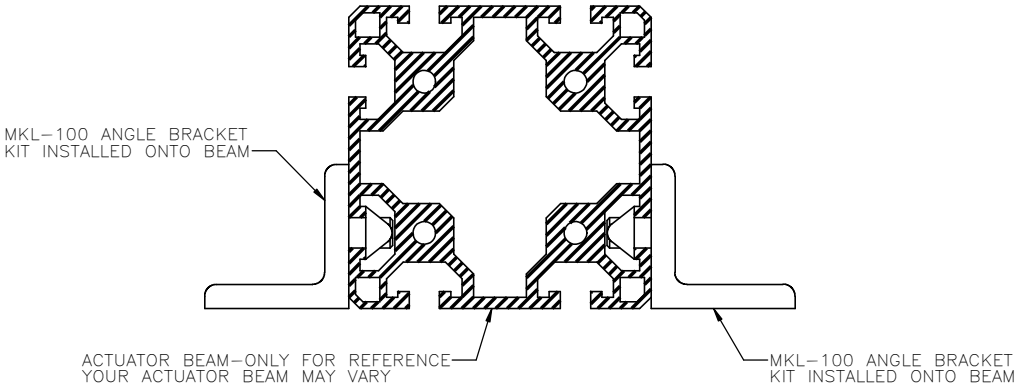

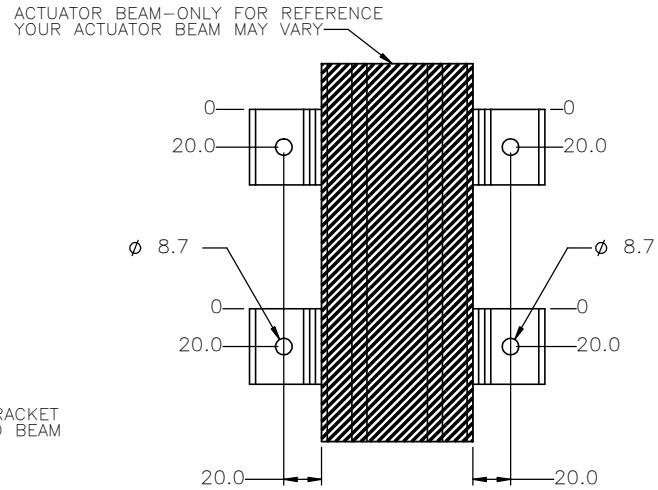

*1 KIT RECOMMENDED FOR
EVERY 1 METER OF TRAVEL*

FOR USE WITH THE FOLLOWING SYSTEMS:

> MSA–M6S	> MSA–SB2	> MSA–BT2
> MSA–R6S	> MSA–SB5	> MSA–DRT
> MSA–135	> MSA–RTU1	> MSA–SRT
> MSA–14S	> MSA–R20	> MSA–M6D
	> MSA–BT5	

ITEM	QTY.	PART NUMBER	REV	DESCRIPTION
1	4	3885008	01	ANGLE BRACKET
2	4	545–18–ZP		M8 x 18 FHCS–ZP
3	4	M20058		T–SLOT NUT, M8

MACRON DYNAMICS INC

THIS DRAWING IS THE PROPERTY OF MACRON DYNAMICS. ANY REPRODUCTIONS SHALL BE FOR QUOTATION, MANUFACTURING, OR PURCHASING PURPOSES ONLY. RELEASE OF DRAWINGS TO OTHER CONCERNS DOES NOT CONSTITUTE LICENSING IN ANY WAY. INFORMATION CONTAINED HEREIN IS PROPRIETARY AND CONFIDENTIAL

DRAWN BY: JA	DATE: 12/10/2018	MATERIAL:	TITLE: ACTUATOR MOUNTING KIT STANDARD DUTY
CHECKED BY: ––	DATE: DD/MM/YYYY		
LAST SAVED BY: JA	DATE: 10/18/2019		
UNLESS OTHERWISE SPECIFIED, DIMENSIONS ARE IN MILLIMETERS. TOLERANCES UNLESS NOTED OTHERWISE:	.X ± .762 .XX ± .254 .XXX ± .127 ANG ± 0°30'	FINISH:	
SURFACE FINISH			SCALE 1:1 / SHEET SIZE C
BREAK ALL SHARP EDGES DIMENSIONAL LIMITS APPLY AFTER FINISHING		SHEET 1 OF 1	PART NUMBER MKL–100 / REV
THIRD ANGLE PROJECTION			